EL - EF 49 C / P

THROUGH HOLLOW SHAFT INCREMENTAL ENCODER

MAIN FEATURES

ø 49 mm encoder recommended in feedback control systems on AC servomotors, interchangeable with size 19 Resolver.

- Easy mechanical mounting
- Small dimensions
- Wide range of resolutions available
- High temperature resistance

EL series
Basic version with 3 channels incremental outputs. Several output types available

EF series
6 channels encoder with optical generation of “Hall effect phases” (commutation signals)
Signal transmission by bit parallel bus

ORDERING CODE	EF	49C	6	L	500	S	5	L	8	X	6	PR	. XXX

SERIES
incremental encoder EL
incremental encoder with Hall phases EF

MODEL
blind hollow shaft 49C
through hollow shaft 49P

EF MOTOR POLES
4 poles 4
6 poles 6
8 poles 8

EF ELECTRONIC INTERFACE FOR COMMUTATION SIGNALS
NPN open collector C
line driver RS-422 L

RESOLUTION
ppr from 100 to 2048
see table for pulses availability

ZERO PULSE
without zero pulse S
with zero pulse Z

POWER SUPPLY
5 V DC 5
(mod. EL) 8 ... 24 V DC 8/24

ELECTRONIC INTERFACE
(mod. EL) NPN N
(mod. EL) NPN open collector C
(mod. EL) push-pull P
line driver L

BORE DIAMETER
mm 6
mm 8
9,52 mm (3/8”) 9
mm 10
mm 12
12,7 mm (1/2”) 12.7

ENCLOSURE RATING
IP 40 X

MAX ROTATION SPEED
6000 rpm 6

OUTPUT TYPE
radial cable (standard length 0,3 m) PR

VARIANT
custom version XXX

© Copyright 2016 Eltra S.p.a. Unipersonale. All rights reserved. All informations in this catalog are subject to change without notice.
Eltra takes no responsibility for typographic errors. For the terms of sales please check the website. REV. 160607

1985 - 2015
eltra@eltra.it | www.eltra.it

EL - EF 49 C / P

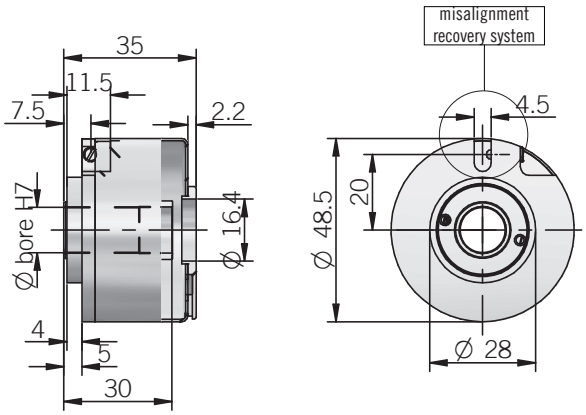

dimensions in mm

ACCESSORIES

Size 19 resolver flange (01 version) ordering code: **FLG000** (P/N 94010087)

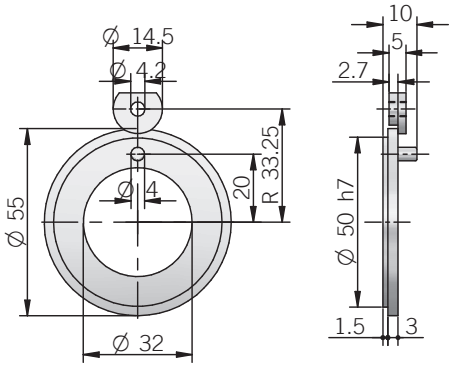

Size 19 resolver flange (14 version) ordering code: **FLG001** (P/N 94010065)

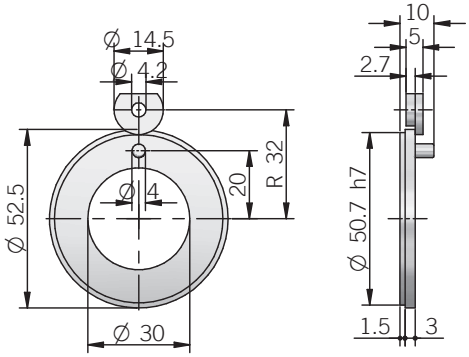

Set n.3 fixing clamps (P/N 94080001)

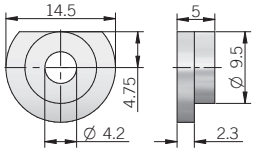

for mounting instruction please refer to product installation notes

RESOLUTIONS

100 4 / 6 poles - 200 4 / 6 poles - 500 4 / 6 / 8 poles - 512 4 / 6 / 8 poles
1000 4 / 6 / 8 poles - 1024 4 / 6 / 8 poles - 2000 4 / 6 / 8 poles
2048 4 / 6 / 8 poles

please directly contact our offices for other pulses

ELECTRICAL SPECIFICATIONS

Resolution	from 100 to 2048 ppr (see table)
Max load current	N / C / P = 30 mA / channel L = 20 mA / channel
Max output frequency	150 kHz
Counting direction	A leads B clockwise (shaft view)
Electromagnetic compatibility	IEC 61000-6-1 IEC 61000-6-3

ELECTRICAL SPECIFICATIONS EL SERIES

Power supply	5 = 4,5 ... 5,5 V DC 8/24 = 7,6 ... 25,2 V DC
Current consumption without load	100 mA max
Output type	NPN / NPN open collector / push-pull / line driver

**output levels according to power supply, for further details please see under Technical basics section*

ELECTRICAL SPECIFICATIONS EF SERIES

Power supply	5 = 4,5 ... 5,5 V DC
Current consumption without load	150 mA max
Output type for incremental signals	line driver RS-422
Output type for Hall phases	NPN open collector (max pullup +30V DC) line driver RS-422

MECHANICAL SPECIFICATIONS

Bore diameter	ø 6 / 8 / 9,52 / 10 / 12 / 12,7 mm
Enclosure rating	IP 40 (IEC 60529)
Max rotation speed	6000 rpm
Shock	50 G, 11 ms (IEC 60068-2-27)
Vibration	5 G, 10 ... 500 Hz (IEC 60068-2-6)
Moment of inertia	2 x 10^{-6} kgm^2
Starting torque (at +20°C / +68°F)	< 0,01 Nm
Body material	EN-AW 2011 aluminum
Shaft material	1.4305 / AISI 303 stainless steel
Housing material	nickel plated brass
Bearings	2 ball bearings
Bearings life	10^9 revolutions
Operating temperature	-20° ... +85 °C (-4° ... +185°F) -10° ... +100°C (+14° ... +212°F) on demand
Storage temperature	-25° ... +85°C (-13° ... +185°F)
Weight	150 g (5,29 oz)

CONNECTIONS

Function	EL cable output N / C / P	EL cable output Line driver	EF cable output
+V DC	red	red	red
0 V	black	black	black
Ch. A	green	green	green
Ch. B	yellow	yellow	yellow
Ch. Z	blue	blue	blue
Ch. A-	/	brown	brown
Ch. B-	/	orange	orange or pink
Ch. Z-	/	white	white
Ch. U	/	/	grey
Ch. V	/	/	violet
Ch. W	/	/	grey-pink
Ch. U-	/	/	red-blue
Ch. V-	/	/	white-green
Ch. W-	/	/	brown-green
⏚	shield	shield	shield

© Copyright 2016 Eltra S.p.a. Unipersonale. All rights reserved. All informations in this catalog are subject to change without notice.
Eltra takes no responsibility for typographic errors. For the terms of sales please check the website. REV. 160607

eltra@eltra.it | www.eltra.it